ELECTRICAL, AUDIO, REAR - Z26SPD92AN/AH/BN/BH (C750828)

2026 RZR - RZR PRO S ULTIMATE (R01) - Z26SPD92AN/AH/BN/BH

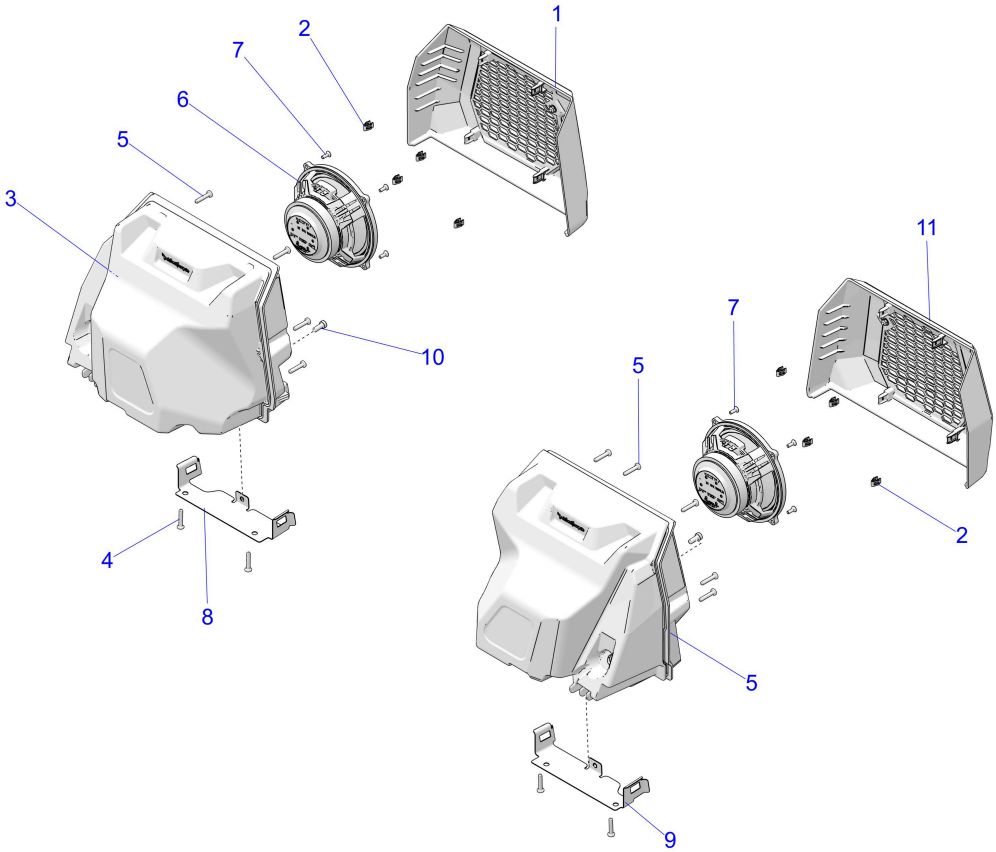

© 2025 Polaris Industries Inc.

C750828

Reference #	*Part#*	*Description*	*Quantity*
	2417266	ASM-SPKR,REAR,LH [INCL. 1,3,6 & 7]	1
	2417267	ASM-SPKR,REAR,RH [INCL. 5,6,7 & 11]	1
1	2639625	ASM-GRILL,RSE,LH,BADGE	1
2	5456313	CLIP-TRIM, PLASTIC, WHITE	8
3	2639684	ASM-HOUSING,SPEAKER,REAR,LH	1
4	7518922	SCR-10X1.00 TX PN HI/LO-Y	12
5	2639685	ASM-HOUSING,SPEAKER,REAR,RH	1
6	2417188	ASM-SPEAKER,COAXIAL,6.5,V2	2
7	7519276	SCR-FLHD-M4X0.7X12MM,TORX	8
8	5274699-458	BRKT-SPKR,RR,LH,BLK	1
9	5274700-458	BRKT-SPKR,RR,RH,BLK	1
10	7521155	KNOB-M6X1.0X15MM	2
11	2639626	ASM-GRILL,RSE,RH,BADGE	1

Copyright 1996-2026 Polaris Industries U.S.A All rights reserved.